max. 135 m³/h

ACmaxx in-line duct fan

Ø 98,5 x 130 mm

- **Material:** Housing: GRP[1] (PBT)
  Impeller: GRP[1] (PA)
- **Direction of air flow:** Intake over struts
- **Direction of rotation:** Clockwise, seen on rotor
- **Connection:** Via 3-pin terminal strip Europa max. 1,5 mm²
- **Highlights:** Universally usable for all main voltages between 85 and 265 VAC, 50-60 Hz, Boost function
  Vibration-isolated motor
  Optional: new impeller for high pressure
  Two speeds over jumper adjustable
- **Mass:** 400 g

- **Possible special versions:**
  (See chapter DC fans - specials)
  - Speed signal
  - PWM control input
  - Analog control input 0…10 VDC
  - Humidity protection
  - Degree of protection: IP 44 (IP 45 possible depending on mounting position)

1) Fibreglass-reinforced plastic

Series AC 100 **Nominal data**		Air flow	Air flow	Nominal voltage	Frequency	Voltage range	Sound pressure level	Sound power level	Sintec sleeve bearings / Ball bearings	Input power	Nominal speed	Temperature range	Service life L_{10} at 40 °C	at T_{max}	Curve
Type high flow		**m³/h**	**cfm**	**VAC**	**Hz**	**VAC**	**dB(A)**	**Bel(A)**	□ / ■	**Watts**	**rpm**	**°C**	**Hours**	**Hours**	
nominal	AC 100 MR	55	32	**115/230**	50-60	85...265	33	4,5	■	1,8	2 050	-10...+55	70 000 / 50 000		①
boost		90	53				40	5,0		3,8	3 150				③
nominal	AC 100 NR	80	47	**115/230**	50-60	85...265	35	4,7	■	2,5	2 750	-10...+55	70 000 / 50 000		②
boost		105	62				42	5,3		4,5	3 500				④
max.	AC 100 HR*	135	79	**115/230**	50-60	85...265	tbd	tbd	■	7,0	4 500	-10...+55	tbd		⑤
Type high pressure		**m³/h**	**cfm**	**VAC**	**Hz**	**VAC**	**dB(A)**	**Bel(A)**	□ / ■	**Watts**	**rpm**	**°C**	**Hours**	**Hours**	
nominal	AC 100 MR*	40	23	**115/230**	50-60	85...265	31	4,2	■	tbd	2 050*	-10...+55	70 000 / 50 000		⑥
boost		62	36				38	4,7		tbd	3 150*				⑧
nominal	AC 100 NR-017	53	31	**115/230**	50-60	85...265	33	4,4	■	2,8	2 680	-10...+55	70 000 / 50 000		⑦
boost		66	39				40	5,0		3,5	3 300				⑨

Subject to alterations

* on request

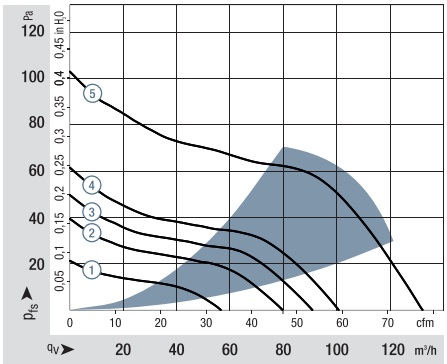

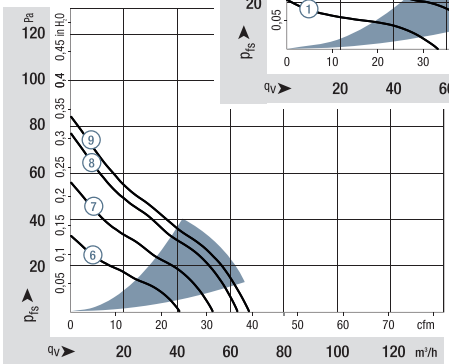

Impeller	Type	Boost off, Jumper low	Boost off, Jumper high	Boost on
high flow	AC 100 MR	1 250	2 050	3 150
high flow	AC 100 NR	2 200*	2 750	3 500
high pressure	AC 100 MR*	1 250*	2 050*	3 150*
high pressure	AC 100 NR-017	2 180	2 680	3 300

Air performance measured as per: ISO 5801,
Installation category A, without accidental contact.
Noise: Total sound power level L_{WA} ISO 103002 measured on half-sphere of 2 m;
Sound pressure level L_{pA} measured at 1 m distance to fan axis.
The acoustic values are only valid for the described measurement set-up and may vary depending on the installation situation. In case of any deviation to the standard setup, the values have to be checked and reviewed once installed or fitted. For detailed information see http://www.ebmpapst.com/general conditions

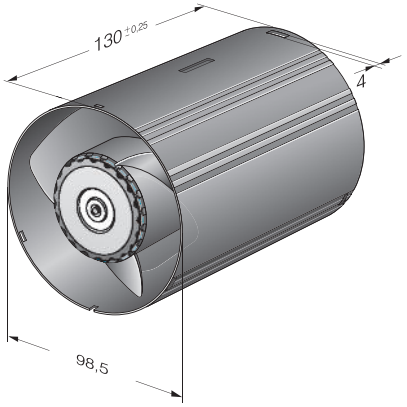

ebmpapst

Highest energy efficiency: 0.03 - 0.045 W/m³/h free air (Specific fan power).
Boost speed setting: 2 speed settings possible via boost function.
Vibration isolation: Reduced transmission of vibrations from motor to housing.
Intelligence: Speed settings and control outputs optional.

Connection

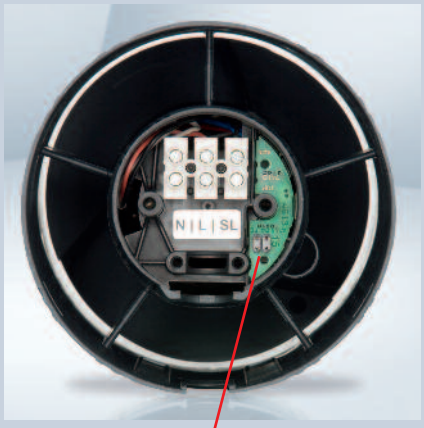

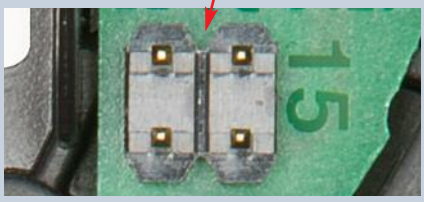

Jumper Low Jumper High

Example 1:
Continuous operation at nominal speed boost speed via light switch.

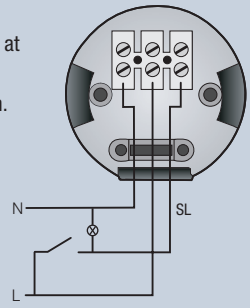

Example 2:
Nominal speed via light switch, separate boost switch.

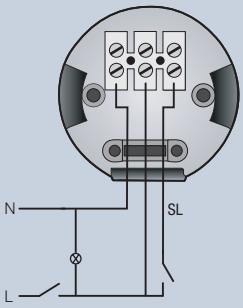

Example 3:
Simple connection, nominal speed without switching.

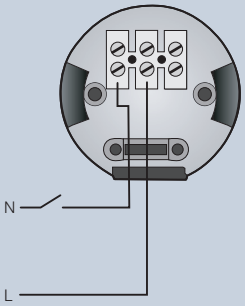

Example 4:
Simple connection, boost speed without switching.

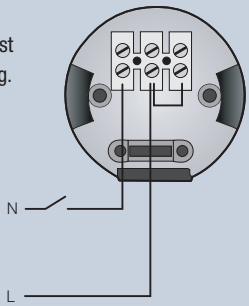
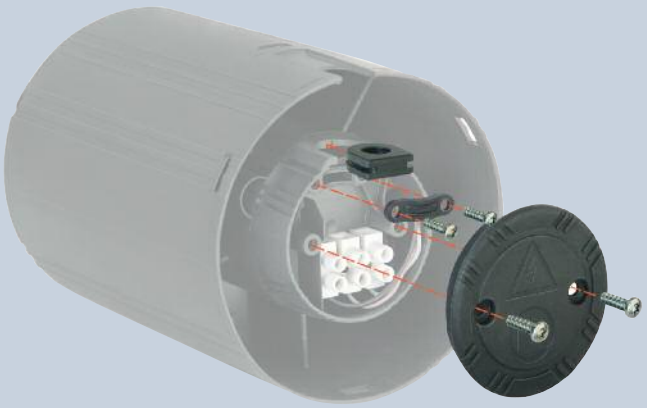
Scope of delivery